THIRD TERM JSS 2 LESSON NOTES

<u>Week One Topic: Plane Figures</u>
Sub-Topic: Construction of Triangle and Rectangle; Parallelogram and Triangle All of Equal Areas

1. Construction of Triangle and Rectangle of equal Areas
The teacher will guide the student on the step-by-step processes to be taken to complete the construction detail shown below.
Sample Problem: Construct a rectangle of sides 60 by 25. Convert this rectangle to a triangle with area equal to the given rectangle.

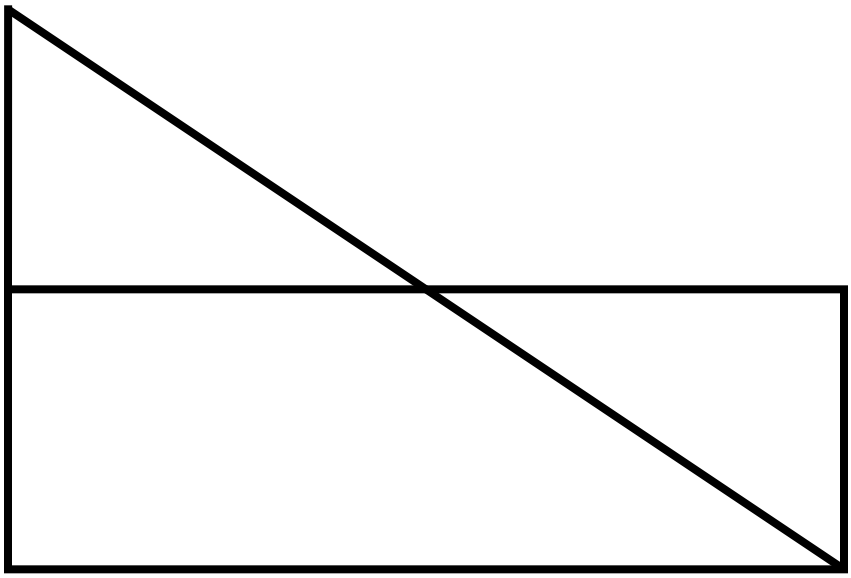

2. Construction of Triangle and Rectangle of equal Areas
The teacher will guide the student on the step-by-step processes to be taken to complete the construction detail shown below.
Sample Problem. Construct a parallelogram of sides 60 x 27, having an internal angle of 120^0. Convert this parallelogram to a triangle of equal area as the given parallelogram.

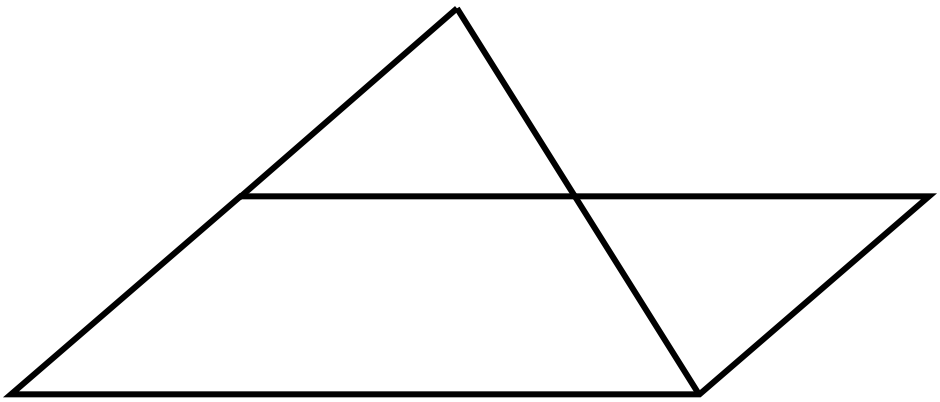

Assignment

1. Construct a rectangle of sides 100 x 45 and convert it to a triangle of equal with the given rectangle.
2. Construct a parallelogram of sides 86 by 40, with 45^0 internal angle and convert it to a triangle of equal area with given parallelogram.

<u>Week Two Topic: Plane Figures</u>

Sub-Topic: Two Triangles; Rectangle and Square All of Equal Areas

1. Construction of Two Triangles of Equal Areas

The teacher will show to the student the steps they will follow to complete the construction work shown below.

***Sample Problem*.** Construct a triangle ABC whose details are given as AB = 60, BC = 45, and angle ABC = 48^0. Convert this triangle to another triangle with the same area as the given triangle.

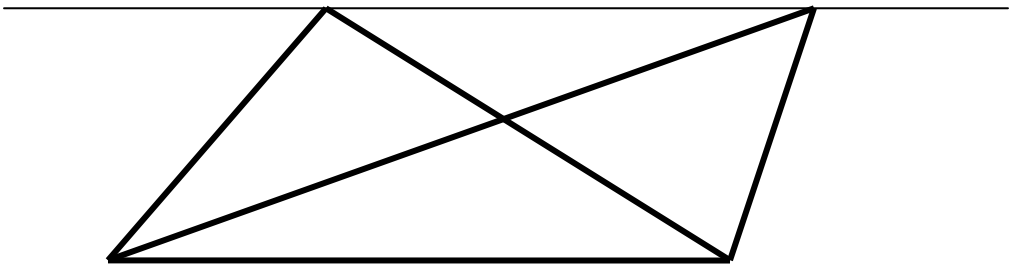

2. Construction of a Rectangle a Square of Equal Area

The teacher will show to the student the steps they will follow to complete the construction work shown below.

Sample Problem. Construct a rectangle of sides 70 by 28 and convert it to a square having the same area as the given rectangle.

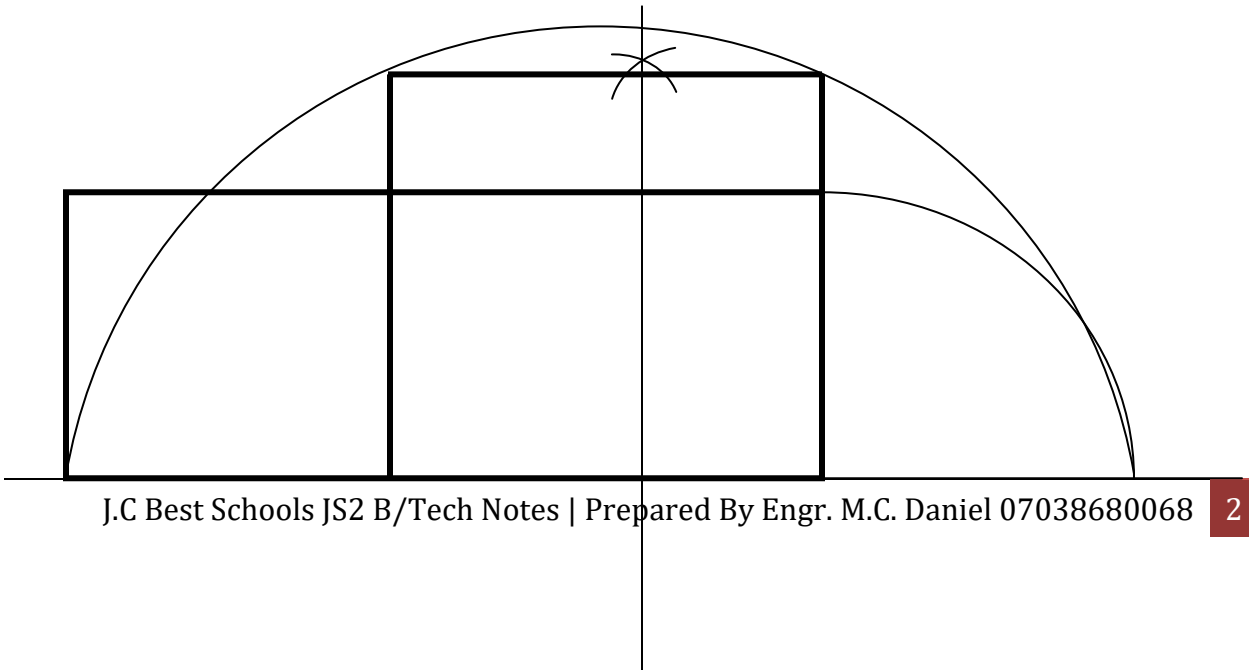

Assignment:
1. Construct a triangle whose sides are 45, 67, and 50. Convert this triangle to another triangle with the same area as the given triangle.
2. Construct a rectangle of sides 110 by 54. Convert this rectangle to a square of the same area as the given rectangle.

Week Three Topic: Plane Figures
Sub-Topic: Construction of Polygons and Triangles of Equal Areas

Construction of Polygons and Triangle of equal Areas
The teacher will guide the student on the step-by-step processes to be taken to complete the construction detail shown below.
Sample Problem: Construct a pentagon and hexagon of sides 30. Convert these polygons to a triangle with area equal to the given pentagon and hexagon.
1.

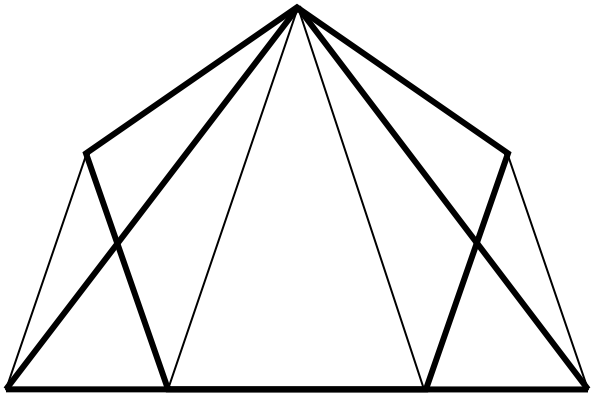

2.

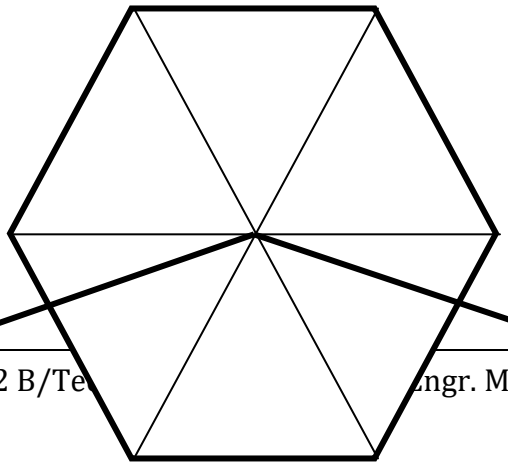

Week Four Topic: Drive Mechanism
Sub-Topic: Gear. Gearing. Types of Gear. Uses of Gear.

Definition: Gear is a circular machine part that is used to transfer rotational motion from one shaft to another shaft. It is also called machine element because it is one of the most important parts in a machine which makes movement and transfer of movement easy.

Gearing: This is systematic arrangement of gears in a box mainly to achieve certain desired types of motion. This means that it is the wise ways of arranging gears so as to achieve such movements as increase in speed, forward motion, reverse motion, idle running, etc.
Types of Gear: Gears are made in different types based on the role each of them play in a machine. Some gear types include worm, bevel, spur, etc. The diagram below shows some of the types of gear that are used in Engineering.

Some examples of assembling gears to achieve gearing condition are shown below.

Uses of Gear

Some of the uses of gear are listed below

1. To change the speed of an engine
2. To make reserve motion possible
3. To overcome heavy loads.
4. To drill holes
5. To transmit power (called torque) in a rotational direction; thus making it possible to twist objects.

Assignment

1. Differentiate gearing from gear itself.
2. In your own words, state what you understand by the each of the uses of gear mentioned in the class.

<u>Week Five Topic: Drive Mechanism</u>

Sub-Topic: Gear Ratio; Gear Speed and Calculations.

To understand the concept of gear ratio, there are certain terms we must know first. They are:

1. Driving gear: This is the gear that produces the rotational motion or force; while,

2. **Driven gear**: Is the gear, which makes contact with the driving gear, and thus receives the motion the driver gear has generated and then begins to run.

Gear ratio tries to use these two terms to help engineers arrive at valuable decisions when selecting gears to use. Some of the things that influence decision making in engineering include **Number (N)** of gear teeth**, Speed (V)** of the gear; and **Diameter (D)** of the gear disc. If 1 stands for the driver gear and 2 stands for the driven, then gear ratios are written as follows:

$\frac{N_1}{N_2} = \frac{D_2}{D_1}$ ---------- (i)

$\frac{V_1}{V_2} = \frac{D_2}{D_1}$ ---------- (ii)

$\frac{N_1}{N_2} = \frac{V_2}{V_1}$ ---------- (iii)

Gear speed: Gear speed is influenced by the term mentioned above, which are diameter, number of teeth, and force on the driving gear involved. The fewer the number of gear teeth, the faster it runs, unless it is in contact with a similar or smaller gear than itself. In the same way, the smaller the diameter of a gear disc, the faster it runs, unless it meets a similar or smaller gear disc than itself. Hence, it is important to note that these are the things that control the speed of gears.

Gear Calculations.

The sample problem given below explains how the ratios listed above are used to predict the properties of gears.

Sample Problem

Calculate the speed of a gear, which has 32 teeth, is driving another gear with 20 teeth, running 940*rpm.* (*rpm* means revolutions per minute).

Solution.

From the given data, V_1 = ? N_1 = 32teeth; V_2 = 940*rpm*, and N_2 = 20teeth. From equation (iii), we have:

$$\frac{N_1}{N_2} = \frac{V_2}{V_1}$$

$$\Rightarrow \frac{32}{20} = \frac{940}{V_1}$$

$$\Rightarrow V_1 x 32 = 20x940$$

$\Rightarrow$ $V_1 = \frac{940x20}{32}$ = 188,800/32 = 587.5*rpm* (this justifies the saying that the more the number of gear teeth, the lesser the gear speed.)

Assignment

1. Calculate the diameter of a gear running at 1250*rpm*, which is driven by another gear whose diameter is 16cm, running at 650*rpm.*
2. If the number of teeth of a driver gear is 18, and its diameter is 25cm, calculate the diameter of a gear it can drive, whose teeth are 34 in number.

<u>Week Six Topic: Woodwork Machines</u>

Sub-Topic: Woodwork Machines. Types and Care of Woodwork Machines.

Woodwork machine are special machines that are used to work on wooden materials in order to make items that are useful to mankind. Different machines have been designed for different purposes during woodwork projects. Some of these machines and their uses will be highlighted below.

Types of Woodwork Machines

Listed and highlighted below are some examples of woodwork machines.

- **Band Saw:** It is used to cut curves in wood and sometimes to cut curves
- **Circular Saw:** It is used to cut large wooden logs into planks of wood sheets.
- **Thicknesser:** It is used to cut wood into square or rectangular bars or selected thicknesses.
- **Planner:** It is used to smoothen or to give a wooden member smooth surfaces.
- **Chain Saw:** It is used to cut down trees, which are then converted to commercial use
- **Sander:** It is used to brush off all the roughness on the surface of a wood. It helps to give wood a smooth surface.
- **Grinder:** Does the same work as the sander. The different between them is that Sander is held in the hand, while grinder stands on a table or any other support.

- **Wood Lathe:** This is a multipurpose machine that is used to do different kind of things on a wooden member, while working on it.
- **Power Drill:** This is a hand-held drilling machine that is used to punch holes inside wood or to enlarge an existing hole in a wood.

Care of Woodwork Machines

The following activities are carried out routinely on woodwork machines to ensure they are working well at all times.

1. Constant greasing and oiling of the machines
2. Constant removal of dust and cleaning of the machines
3. Constant check for strange noise coming from the machines.
4. Machine to be operated by approved persons.
5. Prompt replacement of damaged or worn-out parts.
6. Students should operate machine under supervision.

Assignment

Search the internet and print out a copy of the following machines: wood lathe, sander, circular saw, band saw, and Thicknesser.

<u>Week Seven Topic: Metalwork Machines</u>

Sub-Topic: Metalwork Machine

Metalwork machines are special machines that are used to work on metals in order to make items that are useful to mankind. Different machines have been designed for different purposes to assist in completing metalwork projects. Some of these machines and their uses will be highlighted below.

- **Power hacksaw**: this is used to cut metal pipes and shafts that have large diameters.
- **Guillotine**: is machine that is used to cut metal sheets, which is wide or long.
- **Grinder**: is a machine that is used to remove roughness on the surfaces of metals.
- **Shaper**: is a machine that is used to cut horizontal or vertical flat surfaces as well as cutting keyway, slots, and grooves into metal members.
- **Miller**: does the same thing as shaper. But, it does even more other things such as cutting curves, angular surfaces, T-slots, dovetail cuts, and cutting of different kind of shoulders on metal members.
- **Drill Press**: is a machine that is used to create new holes or widen existing ones on a metal member.
- **Power drill**: is a hand-held machine that is used to make holes into metal members.
- **Center lathe**: is like the wood lathe. But it is much bigger and stronger that the wood lathe. It is a multipurpose machine that is used to perform all kinds of cutting activities on metal members.

Care of metalwork machines

The following steps are taken to ensure metalwork machines last long while in use.

1. Keep all machines clean after usage.
2. Ensure corrosion and it sources are removed from machines.
3. Follow manufacturer's instructions when using the machine.

4. The moveable parts should be constantly lubricated to improve running condition.
5. Constant servicing and prompt responses to unusual behaviors should be observed.
6. Turn off all machines and remove them from power sources after use.
7. Do not start a machine you do not know how to stop.
8. Operating a machine should be done by approved persons or under supervision.
9. There should be enough lighting where machines are being used.

Assignment

1. Print out the picture or a Lathe machine
2. List all the parts of a lathe machine.
3. Make a note on the operations of a lathe machine to include the following: Taper Turning, Plain Turning, Stepped Turning, Facing, Drilling, and Threading.

Week Eight Topic: Metalwork Machines

Sub-Topic: The Lathe Machine

The Lathe is a machine that is used to produce geometrical surfaces to a high degree of accuracy. This means that it is a multipurpose machine that use used to accomplish different tasks on a metal work piece.

Types of lathe machine. There are three main types of lathe machine. They are: Center Lathe, Capstan Lathe, and Turret Lathe. Each of these machines differ from the other based on the kind of task they are used to do during metal work projects.

Parts of a lathe machine.

Listed and briefly explained below are some parts of a lathe machine.

1. **Bed:** This is the long framework on which all the other parts of the machine are mounted.
2. **Headstock (live center):** it is mounted at one end of the lathe. It is used to rotate the work piece. It also carried the gear and the chuck.
3. **Tailstock:** it is mounted at the opposite end of the headstock. It can move along the bed, and can be locked at any point along the bed. It carries the fitting tools and other parts. It holds the rotating work piece.
4. **Carriage:** is located near the headstock. It carried the saddle, cross slide, compound rest, top slide and apron.
5. **Tools Post:** is mounted on the opposite side of the carriage. It can move along the bed; and it carries the cutting tool. It can be adjusted to fit desired cutting needs.

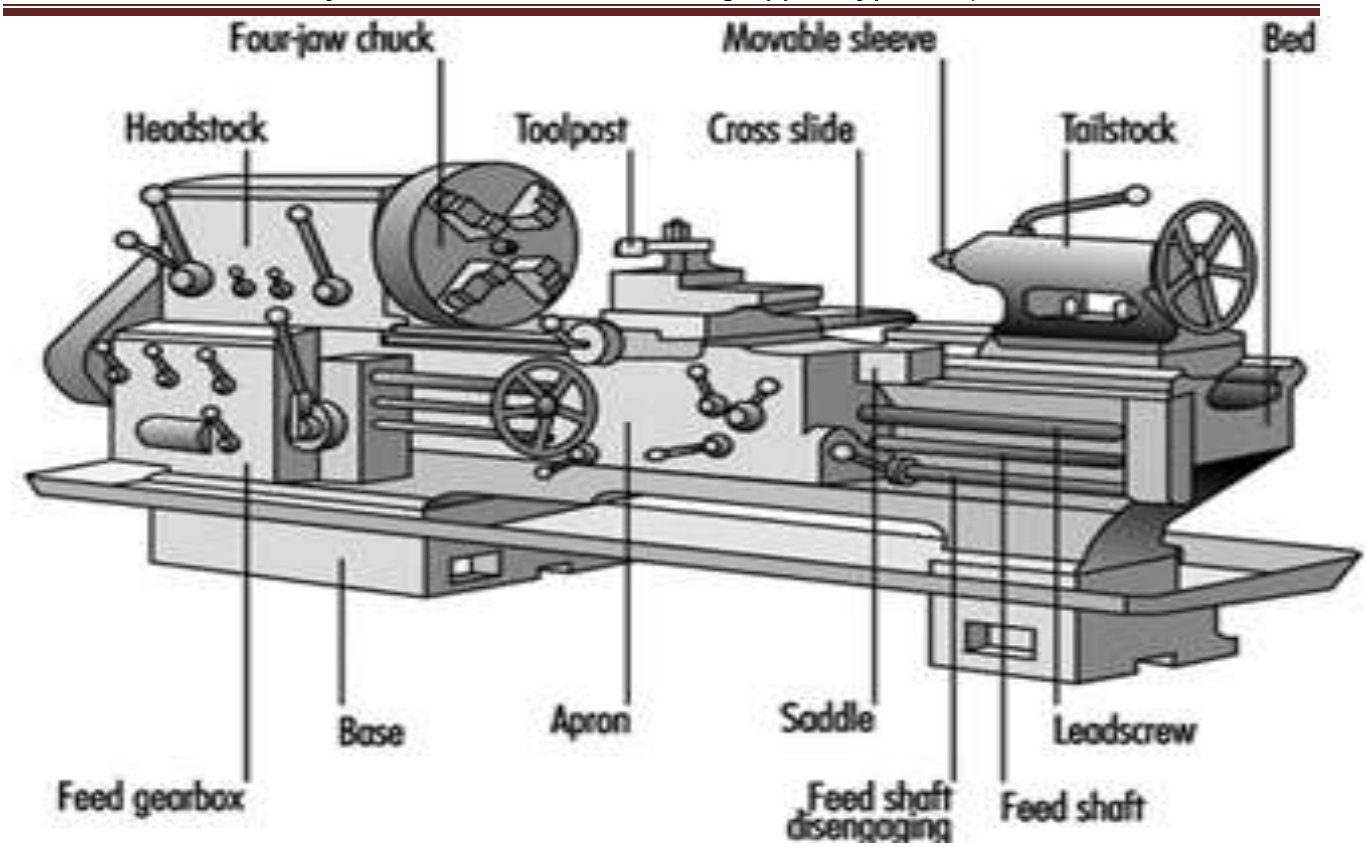

<u>The Lathe Machine</u>

Assignment
Write notes on the following parts of lathe holding devices: chuck, driving plate and center, face plate, cranked dog, and straight dog.

<u>Week Nine Topic: Blue Print Reading</u>
Sub-Topic: Symbols for Building Blue Print and Accessories

Introduction
Building blue print is the technical name for building plan. It the instrument or tool that builders use to successfully construct any structure they have as a project, such as bridges, halls, stadia, churches, mosques, houses, etc. It is the material that guides these builders to put the different building parts at their right places. Blue prints are designed by Architects. They use a lot of symbols to indicate different parts of the building. Some of these symbols are shown below.

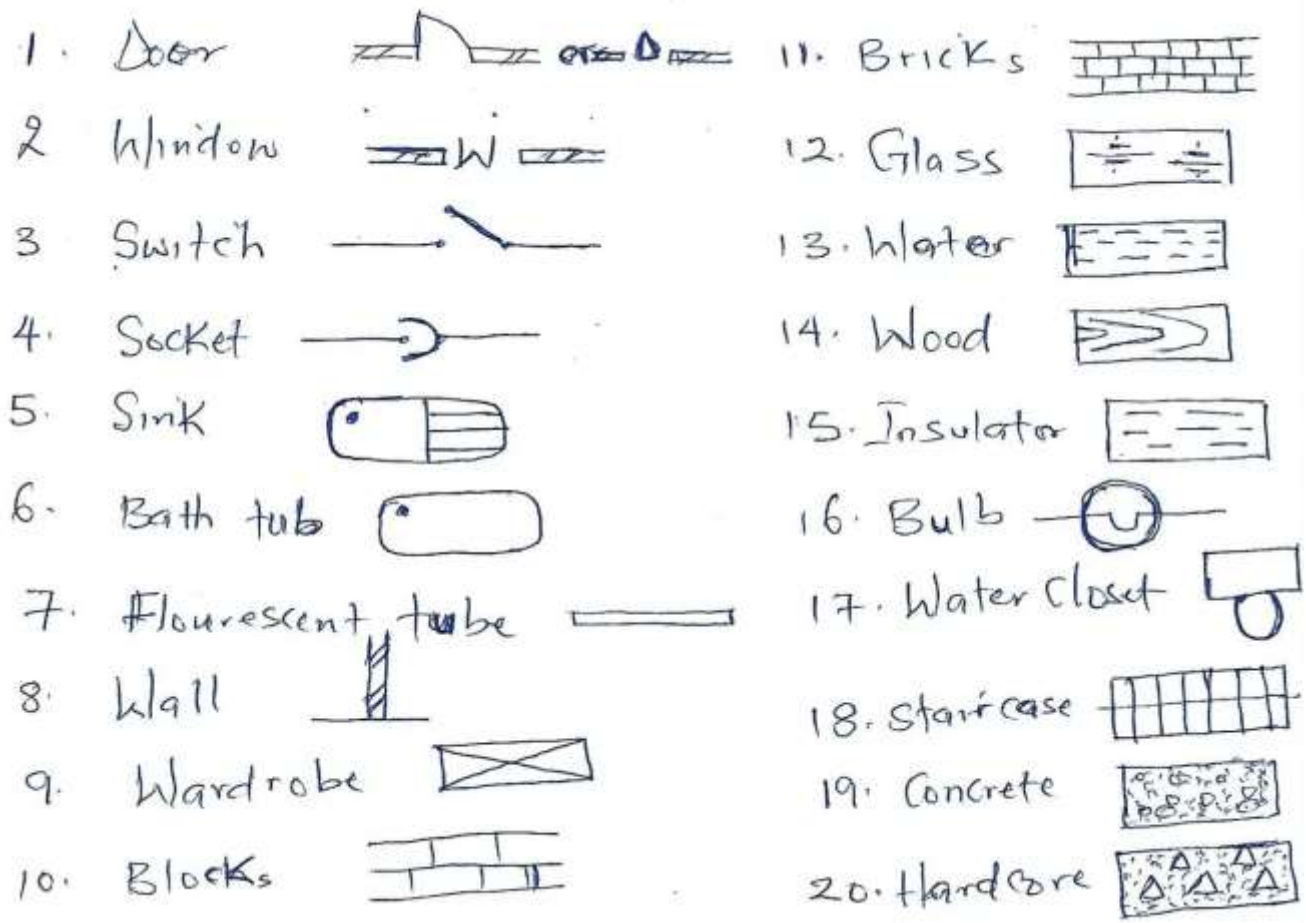

Assignment

Use the internet to find some standard building blue print that architects use to represent such building materials as (a) Water system (Plumbing system) (b) Electrical system, and (c) Architectural system (or building parts).

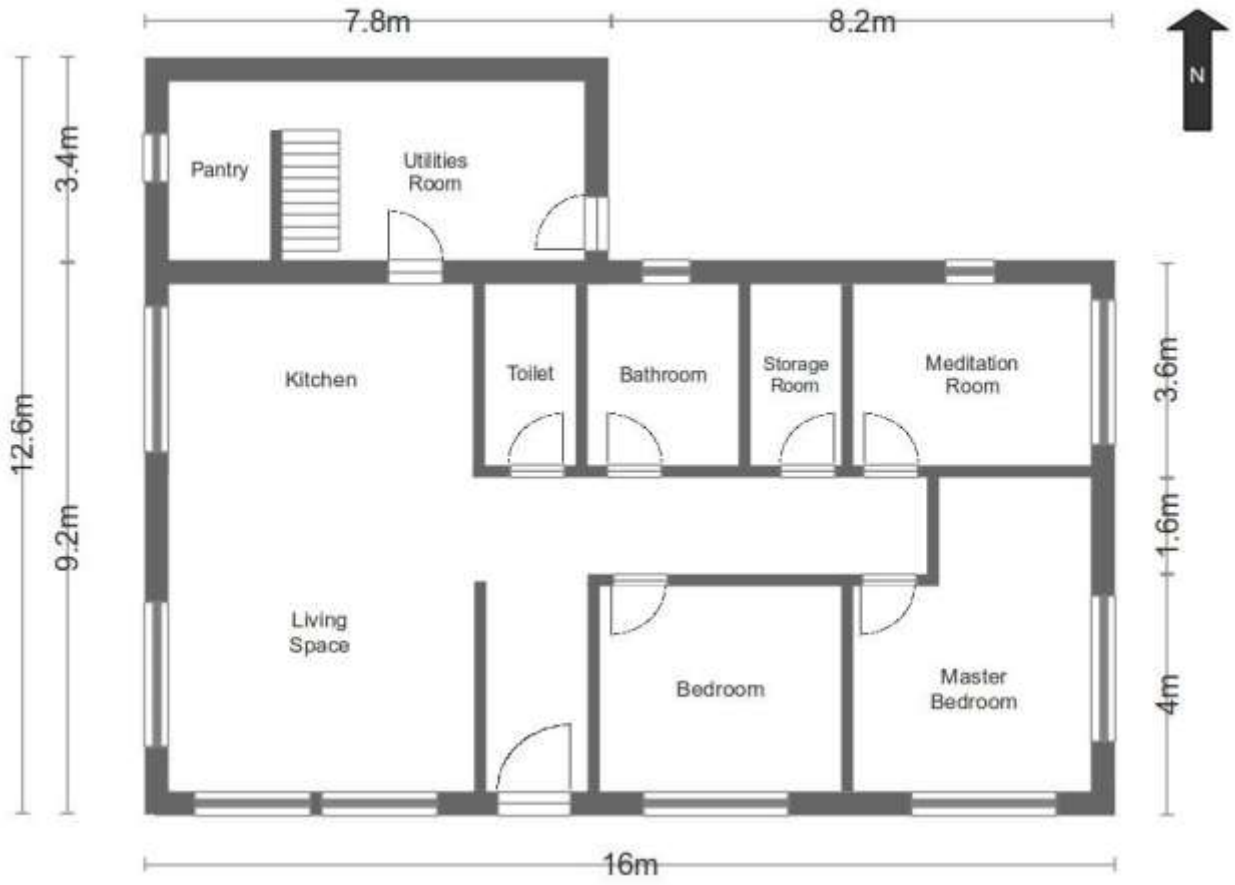

<u>An example of a blue print is shown above</u>

<u>Week Ten Topic: Electricity Technology</u>
Sub-Topic: High and Low Electricity Transmission

Introduction
Electricity transmission is the movement of electric energy from the point where it is produced to the point where it is needed to perform important tasks for man. The movement of electricity is very vital to human survival today; and it has been playing major roles in advancing the good of mankind and his living standard since it was invented.

Methods of Electricity Transmission
There are two methods by which electric energy is transmitted. These are by **waves** and by **wires (or cables)**. When electric energy is transmitted through waves, it travels as electromagnetic waves, sent out by the help of special equipment that includes **transmitter, modem, satellite, and a receiver.** But when it is transmitted through wires, it only requires the generating system and the connecting **cables.**

Types of Electricity Transmission

Before we can look at the two types of electricity transmission, we would need to know some terms that are used to explain them. **Cycle** is one of the terms used. It means the movement of a single electric current (moving electron) from where it is generated to the point where it is used and then back to the point where it is generated. It is like going round a circle. The number of times a single electric current completes this cycle in 1second is called **frequency.** And it is represented by the name of the German scientist who first came up with the idea. His name was Hertz, abbreviated as (Hz). So, 1Hz = 1cycle per second.

Transmission Types

1. Low Level Electricity Transmission: This is the transmission of electric current at a very low speed. At this speed, electric current is said to go round cycles 50Hz or 60Hz per second. All transmissions through cables are done at this low level. In Nigeria, our domestic electric current comes to us and goes to it source at a speed of 50Hz. In USA, it is between 50Hz and 60Hz. This means that a single electron goes round the cycle 50 or 60 times every second.

2. **High Level Electricity Transmission**: In this case, the speeds of electricity transmission are at extreme levels. They run into millions of Hz every second. This type of transmission can only be achieved through space, by using waves. Radio, Television, internet transmissions and telephone calls fall under this category. Take a radio station, for instance. WAZOBIA FM transmits at 99.5MHz (Mega Hertz). What this means is that a single electron coming from the transmission station, will have to come to listeners' radio sets, etc and go back to the station at a speed of 99,500,000Hz every single second. Once the electrons cannot complete this number of cycles per second, then, the transmission will begin to fade and, it will begin to hiss.

Assignment

Use your own words to state what you understand by the following terms (a) Cycle (b) Hertz (c) Mega Hertz and (d) The interpretation of the transmission channels for Brila FM, done at 88.9.

<u>Week Eleven Topic: Electricity Technology</u>

Sub-Topic: Electricity Distribution

Introduction

Electricity distribution has to do with the ways electric energy is generated and distributed to people both far and near, for their domestic and industrial usage. It is very important we know how this things are done. That is the essence of this lesson.

Generating Plants

There are a number of sources from where electric energy can be generated. Some of them include wind mill, solar energy, geothermal heat, nuclear energy, and hydroelectric power plants.

In Nigeria, our main source of electric energy is the hydropower station located at Kainji Dam in Niger State. With the help of the huge water turbine engine and the giant alternator, the flowing water helps to produce current at 11,000Volts. There, a massive transformer is used to step this voltage up to 33,000volts for onward transmission through the *high tension* wires. The high tension cables are extended to all the states in the country and beyond. But along the line, there are other small stations where there are transformers that help to keep the voltage at its original level. This is because, the longer the distance the voltage has to travel to reach its

destination, the more the voltage will drop. And, because the voltage required to provide energy to an entire State can only be done from a voltage of 33Kvolt or more, those small stations, called **substations**, are placed along the way to keep the voltage at it optimum amount.

Once the 33Kv has reached its destination, a step down transformer is used to bring it down to less harmful levels of 220/230volts, which we use at home; and 415volts, which companies and industries use. With the help of mini-transformers, these smaller voltages are fed to the various consumer units.

National Grid, Transmission Accessories and Components

The National Grid is actually made up of the high tension wires and their connecting stations. It is the central electrical network, from where electricity is shared to everyone in the country at the same amount. This is to prevent that danger that comes with sharing different amount of energy to different consumer locations. All the different sources for generating current are connected to the National Grid for correct synchronization and use. The equipment that is used to synchronize them (or, to bring them to the same level) is called Bursbar.

Transmission accessories are the things that are used to distribute the electric energy, but current does not touch them or pass through them. Examples are insulators, bolts, nuts, mast, poles, etc. But, **transmission components** are the things through which the current must pass to reach their destinations. Examples include cable, bursbar, transformer, etc.

Assignment

Determine and explain in detail how the following things are used to generate electric current

1. Wind mill
2. Nuclear energy
3. Geothermal heat, and
4. Solar energy.